TWINFIRE

LUMIO

IP65 Twinspot Emergency Floodlight - White

Product Dimensions

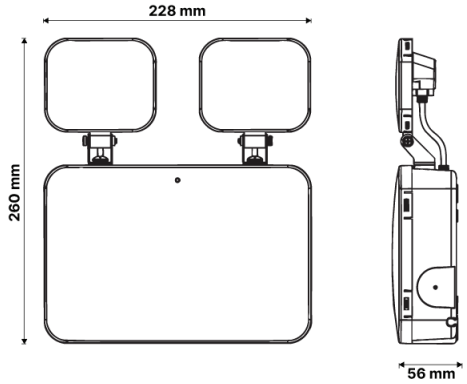

Product Specifications

Input voltage	220-240V~50Hz
Input power	2W
Electrical classification	II
Working temperature	0 to 40°C
IP Rating	IP65
IK Rating	IK08
Wiring	Flex and plug 1.2m
Mounting type	Wall Mount
Battery type	LiFePO4
Emergency duration	90 mins
Battery charging time	16 hours
Battery code	LUMIO-BAT-1800
Emergency output	2 x 125lm
Self-test	Yes
Warranty	3 Years

SAFETY INFORMATION

Read instructions carefully before installation. Failure to follow instructions may result in electric shock, fire and/or serious injury.

- This product must only be installed by a licensed electrician.
- Before commencing installation turn off and isolate the electrical supply.
- Risk of accidental contact with live parts. do not energise with product open or disassembled.
- Mains supply and battery circuit separated by reinforced insulation.
- The only user serviceable/ replaceable part is the battery pack.
- Do not attempt to service other parts of the fitting as this will void the warranty.
- After installation allow the battery to charge for 24 hours before carrying out discharge testing.
- As the installer, it is your responsibility to ensure you comply to all relevant building and safety codes.
- The light source contained in this luminaire shall only be replaced by the manufacturer or their service agent or a similar qualified person.
- The replacement of the battery is needed when they no longer meet their rated duration of operation after the corresponding recharge period.
- This luminaire is intended only for mounting in locations where the plug and socket are protected from unauthorized disconnection.
- DALI Is not SELV and as such should be treated as FELV.
- All maintenance, such as battery change on this luminaire to be performed by qualified personnel only. De-energise all supplies before maintenance.

Installation Steps

Remove the product from the box and inspect it for any damage. If the product is satisfactory, proceed with the installation.

1.

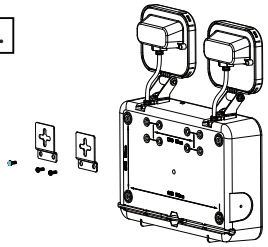

Fit the hooks to the body at the marked points.

2.

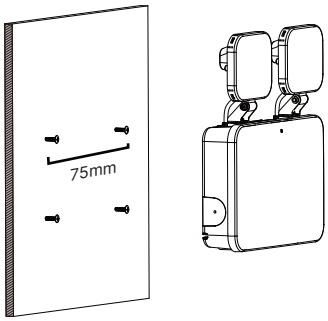

Fix screws in desired position 75mm apart, then hang the unit onto the screws.

Spotlight Rotation

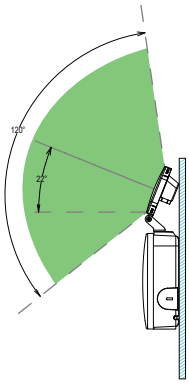

Upward tilt: upto 22º

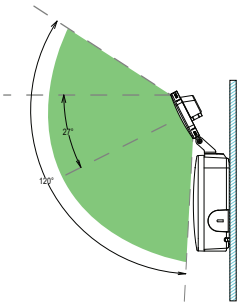

Downward tilt: upto 27º

Self-Test Funtion

This product can automatically test its own emergency operation and report the result on the indicator LED, removing the need for a manual discharge test at the fitting.

Activating Self-Test

Self-test is disabled from the factory and must be activated at commissioning. Confirm the unit has been powered for long enough to charge the battery before starting.

1. Switch the mains power OFF and leave it off for 20 seconds.
2. Switch the power ON and OFF a further three times, allowing about 3 seconds between each switch.
3. The indicator LED flashes amber three times to confirm self-test is active.

Automatic Testing

Once activated, the unit performs a 90 minute duration test every 6 months with no further action required. Test start times are staggered so that units on the same circuit do not discharge together.

Checking the result

The result of the most recent test is displayed on the indicator LED for 7 days, after which the LED returns to normal operation. To recall the last result at any time, press and hold the test switch for more than 2 seconds, twice.

Indicator LED	Status
Solid green	Normal operation, charged
Green, long flash	Normal operation, battery charging
Green, short flash	Test pending, battery charging
Amber, slow flash	Duration test in progress
Amber 4s, Green 1s	Test passed
Amber, flash fast	Test failed

A failed result will continue to display until the fault is rectified and a further duration test is completed. Testing must be recorded in accordance with AS/NZS 2293.2.

Battery Life & Replacement

Minimum battery life is 4 years and can only be used under emergency mode. The battery must be replaced once it can no longer meet the required duration. Battery life can be reduced if not discharged - it is recommended that the battery be discharged and recharged at least once every 6 months.

To replace the battery:

1. Remove product cover to access battery.
2. Disconnect battery and remove.
3. Replace battery as it was installed previously.

NOTE: Allow a minimum 24 hours charging time before carrying out any discharge tests as per the requirements in AS/NZS 2293.

Warranty

This gives you benefits that are additional to other rights and remedies that you may have pursuant to other laws relating to the Lumio lighting products. Those laws include the Australian Consumer Law and the New Zealand Consumer Law.

Our goods come with guarantees that cannot be excluded under the Australian Consumer Law or the New Zealand Consumer Law. You are entitled to a replacement or refund for a major failure and compensation for any other reasonably foreseeable loss or damage. You are also entitled to have the goods repaired or warranty replaced if the goods fail to be of acceptable quality and the failure does not amount to a major failure.

Nothing in this warranty is to be interpreted as excluding, restricting or modifying any law or statute applicable to the supply of Lumio products which cannot be excluded, restricted or modified by the Australian Consumer Law or the New Zealand Consumer Law (where applicable).

If you think your Lumio product is defective, you can choose to make a claim under:
1. The Australian Consumer Law in Australia;
2. The New Zealand Consumer Law in New Zealand; and/or
3. This warranty, as may be applicable.

Subject to the terms of this contractual warranty, if your Lumio products are defective, we will (at our election) repair or replace the Lumio products. Once we make this election (and take the relevant action), we will have honoured our obligations under this contractual warranty.

Our total liability under this warranty is limited to the cost of repair or replacement of the defective product (at our election). We otherwise exclude all liability in relation to the product to the fullest extent permitted by law (noting our comments above regarding the Australian Consumer Law and any other rights or remedies you may have).

Lumio warrants that it will remedy premature product failure and defects caused by faulty materials or workmanship in Lumio lighting products as follows:

Product Type	Warranty	Remedy
General Lighting (unless otherwise stated)	3Yr	Lumio products labelled 'return to base' are remedied at our own premises (or agent's premises). This means that you are responsible for returning the Product to us for repair, replacement or refund, and collecting the Lumio product from us once it has been repaired or replaced (at our discretion).
Emergency Lighting & Exits	3Yr	
Accessories and Batteries	1Yr	

All warranty periods apply from date of purchase. Date of purchase means the date that you purchased the Lumio product from a Lumio authorised retailer, unless marked otherwise.

For this warranty to apply, you must:

a. Have purchased the Lumio product from an authorised retailer in Australia or New Zealand;
b. Follow the manufacturer's instructions applicable to the Lumio products;
c. Follow the Industry Standards for installation and usage applicable to the Lumio products (if any);
d. Follow any other written or verbal instructions for installation, operation, care, repair and maintenance of the Lumio products. Those directions may be supplied with the Lumio products, printed on the labels, packaging or operation manuals, published on the Lumio website or otherwise published from time to time; and
e. Follow the claims procedure for making a warranty claim as outlined in this document

Within 7 days of any defect arising (or the day that you should have reasonably become aware of the defect), you must either return the defective goods to the point of sale for refund, or notify Lumio of the defect in writing through our claims processes.

What must be included in the warranty claim:

- proof of purchase (if available) date and place of purchase
- the item number/ code of the returned product and the number of items claimed
- the reason for the claim and written description of the defect (including photographs where reasonably possible)
- any information provided by the customer
- your written assurance that the Lumio products have not been:
  - incorrectly assembled or installed;
  - incorrectly operated or used or maintained;
  - incorrectly repaired or modified;
  - exposed to abnormal conditions; or
  - damaged by you (due to negligence or otherwise)
- request for labour allowance rates (if applicable)

To lodge a warranty claim, please visit our website at lumio.com.au/warranty

Alternatively you can make a claim directly via email at **sales@lumio.com.au** or telephone **1300 438 658**.

Once we receive your warranty claim, we will contact you within 2 working days.

This warranty does not apply to loss or damage caused by wear and tear, misuse, incorrect installation or operation, failure to clean and maintain, incorrect voltage or non-authorised electrical connections, adverse external conditions (such as power surges and dips, acts of God, exposure to heat, corrosion, insect or vermin infestation), use of non-authorised or defective parts or globes, or to items that have been repaired by a person other than us or a repairer approved by us.

V1.1

Images are for illustrative purposes only.
Due to changes in industry standards and continual product development, product specifications are subject to change without notice.

For sales and product information telephone
Customer Service: 1300 438 658
New Zealand: 0800 235 867

Website: lumio.com.au